iT4X

Elite thermal transfer desktop barcode printer with 300-meter ribbon supported

- Print speed up to 8 ips.
- With the unique dual transmissive sensors for accurate positioning and efficient printing.
- The modular design of printer head makes the disassembly and assembly easy.
- With the function to automatically identify the printer head with 203 dpi and 300 dpi and automatically configure the printer without PC settings.
- With super large storage, DDR2 RAM 128 MB, Flash 8 GB.
- Cool black housing with printer mechanism, stable and durable.
- With various media to meet the demand of wide area.
- With free label editing software Bartender to make the label editing convenient and easy.

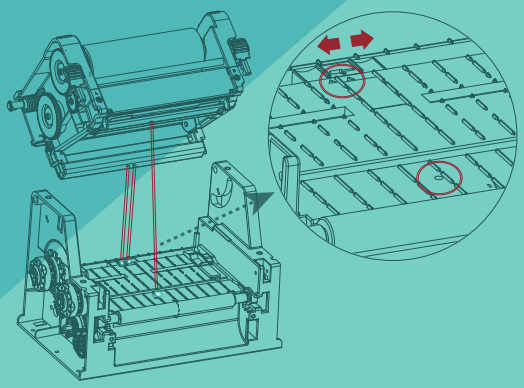

Model		iT4X
Print spec	Printing Method	Thermal transfer
	Resolution	203 dpi / 300 dpi
	Max. Printing Speed	8 ips(203 dpi) / 6 ips(300 dpi)
	Max. Printing Width	108 mm(203 dpi) / 106 mm(300 dpi)
	Pringting Length	2286 mm(203 dpi) / 1524 mm(300 dpi)
	Protocol	Compatible ZPL-II, EPL2, DPL
Media	Width	25.4 mm ~ 118 mm
	Thickness	60 μm ~ 250 μm
	Roll	127 mm
Ribbon spec	Type	Wax, Wax/Resin, Resin
	Width	30 mm ~ 110 mm
	Inradium	25.4 mm
	Max.Length	300 m
Font	Resident Fonts	Alphanumeric, simplified Chinese, traditional Chinese, 29 international character sets
	Download Fonts	Support
Barcode	Linear	UPC-A, UPC-E, EAN128, Codabar, CODE128, CODE39, CODE93, EAN-8, EAN-13, UCC/EAN128, POSTNET, ITF14, HIBC, MSI, Plessey, Telepen, FIM, GS1 DataBar, German Post Code, Planet 11 & 13, Japanese Postnet, Interleaved 2 of 5, Standard 2 of 5, Industrial 2 of 5, Logmars, CODE11
	2D	CODE49, CODABLOCK, PDF417, Data Matrix, Maxicode, QR Code, MicroPDF471, Aztec
Sensor	Gap Sensor	Transmissive (Fixed, Dual)
	Black mark Sensor	Reflective (Adjustable, Full-Range)
	Other	Paper out detect, Ribbon out detect, Print head left detect, Print head temperature detect
Interfaces	Standard	USB Type B, RS232, Ethernet
	Optional	Wi-Fi and Bluetooth
Memory	RAM	128 MB
	Flash	8 GB
Electrical	Input	AC 100~240 V, 50/60 Hz
	Output	DC 24 V, 2.5 A
Environmental	Memory	5℃ ~ 50℃, humidity 25% ~ 85%, non-condensing
	Operation	-40℃ ~ 60℃, humidity 10% ~ 90%, non-condensing
Software	Driver	Windows 7/8/8.1/10, Windows Server 2008/2012/2016, Linux, MacOS
	Label Design Software	BarTender 2016 UltraLite
Options & Accessory		Black T4P External label Peeler Module, Black T4GC External Cutter Module, External Label Roll Holder
Dimension（L×W×H，mm）		308×250×180
Weight（Kg）		2.8
Agency Approval		CE EMC(EN 55022 Class B), FCC EMC(Class A), CCC, RoHS

Xiamen Hanin Electronic Technology Co.,Ltd.

ADD: 5F, 10# Building, Gaoqi South 12 Road, Aide Industrial Park, Huli District, Xiamen, P.R China
TEL: +86-(0)592-5932525 FAX: +86-(0)592-5885992
WEB: www.idprt.com EMAIL: info@idprt.com

iDPRT 201901